MICROWAVE PROCESSES AS A TOOL FOR MATERIAL ENGINEERING

Deyan Sabchev Dimov[a], Vladimir Christov Denishev[a], Erintche Michailova Spassova[a], Yordan Metodiev Shopov[b], Gencho Vasilev Danev[a]

[a] Central Laboratory of Photoprocesses, Bulgarian Academy of Sciences, "Acad. G. Bonchev" St., bl. 109, 1113 Sofia, Bulgaria, E- mail address: dean@clf.bas.bg;
[b] Technical University, "Kl. Ohridski" blv.,# 8, 1756 Sofia, Bulgaria

A pilot equipment for applying microwave treatment in organic vacuum deposition technologies has been developed. A new possibility of influencing the process of obtaining polyimide thin films as composite matrix or insulating layer by simultaneous evaporation of the polyimide precursors - 4, 4'- oxidianiline (ODA) and pyromellitic dianhydride (PMDA) have been shown. The potential opportunity of the microwave process as a method for fabrication of new materials with novel properties that cannot be obtained by other processing techniques and the exciting new areas of research and technology are being discussed.

Keywords: polyimide, microwave treatment, vacuum deposition

1. INTRODUCTION

The recent demand in modern microelectronics industries of materials of high stability has led to an increasing development of advanced polymers with applications as dielectric films, passivation coatings, etc**.** Polyimides are one of the classes of high - performance polymers widely used in microelectronics [1,2].

From the technological point of view, microwave irradiation is of an increasing interest because it offers a clean, cheap, and convenient method of heating which often results in higher yields and shorter reaction times. Microwave irradiation has received a new ever growing application in organic synthesis for optimizing and accelerating of chemical reactions [3] and for selective heating of adsorbed phases [4]. An increasing application of the microwave heating techniques is expected in the areas of synthesis of porous inorganic materials. The microwave technique can be successfully applied in all cases when materials containing polarizable molecules are to be treated. It is clear, that microwaves are not a panacea but used correctly and with understanding they can be of colossal benefit to the chemist saving both time and money [5].

The microwave technology has potential advantages for thin layer materials, in which an application of thermal treatment is incumbent and especially polymers in which thermal conductivity is particularly poor and large thermal gradients are generated during fast heating rates thus causing excessive internal tensions [6].

The aim of the present study is to develop a pilot equipment for applying microwave heating in organic vacuum deposition technologies. The study was carried out to show a possibility for obtaining polyimide thin layers by a simultaneous

evaporation of the polyimide precursors (4, 4'- oxidianiline (ODA) and pyromellitic dianhydride (PMDA)) and using microwave processes for their polycondenzation .

2. EXPERIMENTAL SET – UP

2.1. Grounds for the possibility to apply microwave processes as a tool for thin polyimide layer formation.

Our hypothesis for the proposed possibility to apply microwave processes as a tool for thin polyimide layer formation is based on the following grounds.

Microwave irradiation interacts with materials through the electric and magnetic fields of the microwave applicator [7,8]. The principal mechanism of absorption of microwave radiation by polymers occurs through a forced oscillation of a dipole moment by the electric field. A dipole moment is formed by adjacent groups with different electron of drawing/donating properties; this results in a partial charge localization on one atom or group and can be viewed as a small, weak bar magnet. Typical groups which form dipoles include hydroxyl, amino and cyanate groups, contained in the polymer and in the polyimide respectively. Since microwaves can be transmitted through the air, various gases or a vacuum for long distances without a significant loss of the electric field strength, the power source can be remote from the applicator and workplace. This makes it possible to apply microwaves in the TFT as an effective heater in a very clean and controlled environment.

2.2. A vacuum method for thin polyimide layer preparation

The poyimide (PI) layers (30-1000 nm thick) are formed on glass or Si substrates by vacuum co-deposition of precursors ODA and PMDA from two independent thermally heated Knudsen-type vessel sources [9]. The base pressure is ≤ 5x10-4 Pa. The deposition rates, controlled by quartz oscillators, are 0,2 to 2 Å/s. In our pilot installation for vacuum deposition of polymers the layers are built up on linearly moving substrates (fixed rates of 5 mm/s) via layer-by-layer formation. The evaporation temperatures are 120 - 145° C for PMDA and 100 - 110°C for ODA. The chemical reaction taking place in the precursors so that a polyimide is obtained requires a temperature higher than 100^0C which so far has been achieved only via thermal treatment of the samples outside the vacuum installation. The poor thermal conductivity of the layers, their insignificant thickness as well as the pre-condition for them to be taken out of vacuum installation represent causes for emergence of undesired defects which can be eliminated by the introduction of MW treatment in vacuum chamber.

3. RESULTS

3.1. A scheme of a developed pilot equipment and a block diagram of the microwave equipment, applied in PI vacuum deposition

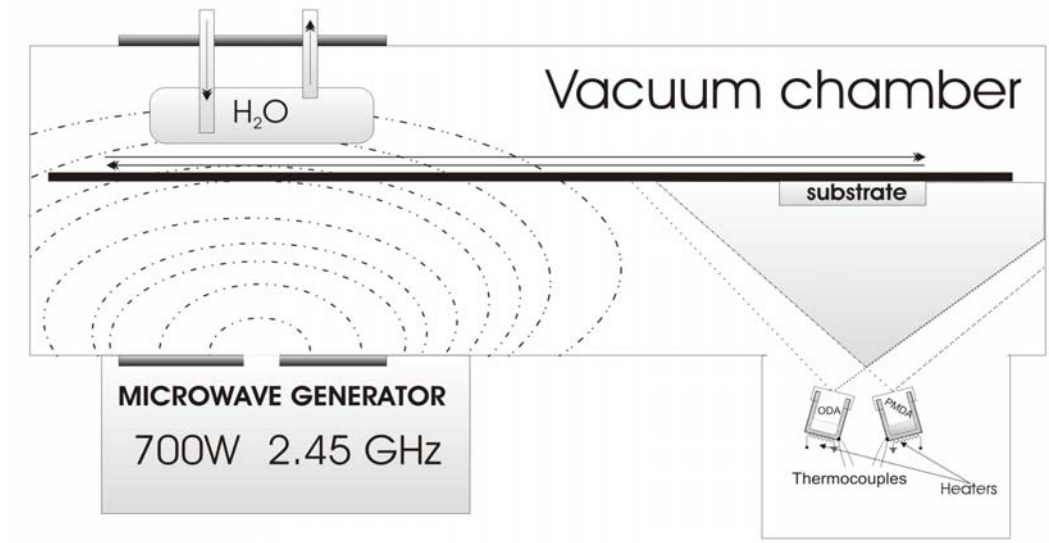

Fig.1. Scheme of a pilot equipment for vacuum deposition of thin polyimide layers and MW treatment

The developed pilot equipment for applying microwave heating in organic vacuum deposition technologies is presented in Fig.1. The detailed block diagram of the microwave equipment is presented in Fig.2. The microwave equipment consists of several basic blocks 1÷6. Blocks 4÷6 determine the parameters, characteristics and regimens of work while blocks 1÷3 exercise the control and protection in cases of incorrect actions of the operator or when under the conditions of state of emergency.

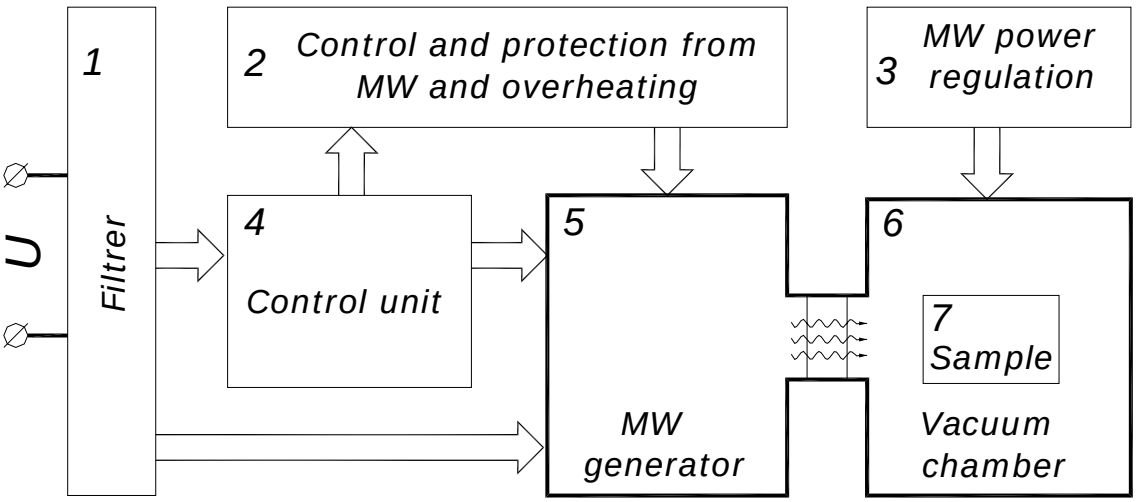

Fig.2. Block scheme of a microwave equipment

The destination and functions of the different blocks are as follow:

1. Filter – does not allow the disturbances generated in the work regimen of the device to get into the power mains and to affect the performance of utensils connected to the same mains.

2. Control and Protection from MW and Overheating – The permanent control and safe protection are of an overwhelming importance in the exploitation of similar

installations. This is achieved through block diagram of the device in cases of improper management on the part of the operator and also by switching on a protection when the limits of the work regimen are exceeded which is accompanied by a thermal overheating. When a signal from the sensors for over-run parameters is produced the system is switched off the mains. A similar reaction is also obtained in an attempt to open the cover of the device in the conditions of a working MW generator.

3. MW power regulation – this block is also related to the safety and normal functioning of the MW generator. It is designed to remove with water load the "excessive" energy from the vacuum chamber. The objects on which an action is exerted in the case in question are ones of relatively small size. That is why a very small portion of the energy, which is constantly entering the vacuum chamber is used while the rest should be "conducted" out of the work space. In cases when this is not achieved the intensity of the electric field increases thus causing local discharges. A certain portion of the energy is getting back into the generator and is released as heat. This in its turn leads to an increase of the work temperature of the magnetron and is troubleshooting in most cases.

4. Block control unit – the main functions of this block constitute the work regimen control and the emission of the respective signals and commands for the proper course of the process.

5. MW generator – it generates MW energy which by means of a wave-guide is conveyed to the work chamber. A standard magnetron of a power of 700 W, work voltage of 4.0 kV and work frequency of 2.45 GHz.

6. Vacuum chamber – The sample for processing is placed in it. Depending on the desired conditions for performing the experiment the work space could be under different pressure. The MW energy enters in the interior of the chamber through a pressure – proof window made of non-polar dielectric.

7. Sample – The PI layer formation is described in the experimental set-up section.

3.2. Capacities of the developed device

The developed system allows for conducting our experiments in the conditions of changing the parameters both of the vacuum deposition of the thin polyimide layers and their microwave treatment. The developed equipment allows for the microwave treatment to be manifold applied following each passing of the substrate with the layer deposited on it over the evaporation sources or just once after the final formation of the film. The pilot equipment combined with the offered design in the vacuum chamber is very flexible and renders possibilities for the use and microwave treatment of various types, ratio and amounts of precursors and also for the deposition of inorganic materials with them. This is a prerequisite for the creation of new thin-layer nano-composite materials.

4. CONCLUSION

A new physical vacuum deposition technology has been developed. For that purpose a pilot equipment for applying microwave treatment in polyimide vacuum deposition technology has been constructed. A new possibility of influencing in this way the production of polyimide thin films as composite matrix or insulating layer by the simultaneous evaporation of the polyimide precursors is expected to be taken advantage of. It was shown that applying the microwave treatment for fabrication of new materials with novel properties that cannot be obtained by other processing techniques opens exciting new areas of research and technology.

ACKNOWLEDGEMENTS

The financial support of the National Fund of the Ministry of Education and Science, Bulgaria – contracts: X-1322 and VUH – 09/05 is gratefully acknowledged.

5. REFERENCES

[1] S. Mallakpour, H. Shahmohammadi, *Iranian Polymer Journal*, 14, (5), 473-483 (2005).

[2] A. Sendijavic, V. Sendijavic, C.K. Frisch, *J. Polym. Sci. Part A Polym. Chem.*, 28, 3603-3615 (1990)

[3] Y. Oishi, M. Kakimoto, Y. Imai, *Macromolecules*, 21, 547-550 (1998).

[4] S. G. Deng, Y.S. Lin, *Journal of materials science letters*, 16, 1291-1294 (1997).

[5] C. Akyel, E. Bilgen, *Energy*, 14, 389 (1989).

[6] D.A.Lewis, S. J. LaMaire, A. Viehbeck, *Ceramic \transactions*, 59, 433-439 (1995).

[7] D.A. Lewis, J.M.Shaw, *MRS Bulletin*, 37-40, November (1993).

[8] Edited by J.P.Tierney&P.Lidstroem, *Microwave Assisted Organic Synthesis*, Blackwell Publishing Ltd (2005).

[9] G. Danev, E. Spassova, J. Assa, I. Karamancheva, A. Paskaleva, K. Popova, J. Ihlemann, *Vacuum* 70 (2003) 37-45.