# A STEP-DOWN PULSE CONVERTER

**Dimitar Dimov Yudov, Atanas Ivanov Dimitrov**

Bourgas Free University, Alexandrovska No. 101, 8000 Bourgas, Bulgaria, phone +359 56 813-890 int.204, yudov@bfu.bg, atanas@bfu.bg

**Keywords:** step-down pulse converter, recuperating coil, auto-transformation coil

*One of the perspective applications of the pulses converters is their, use as charging devices for batteries. A scheme of direct step-down converter with a recuperating winding is typically used. It purposed for limiting the voltage on power switch up two times than power supply. The characteristic of the load (opposite voltage) determines the use of the scheme with an auto-transformational secondary winding which has demonstrated its advantages compared to the scheme with the recuperating winding. The specific in this case is the small number of the secondary winding of the transformer with which, the highest voltage on the power switch is set lower, compared to transformer with recuperating winding. By the right choice of winding numbers, this voltage can tune in addition.*

## Introduction

The use of storage batteries is still growing up because of the increasing number of mobile electrical consumers. A great number of them are the lead-acid ones that people make contact with almost every day. The prolongation of these batteries lifetime is possible through the repeated restoration of their capacity after their exploitation. Achieving a longer lifetime of storage batteries depends on the quality of the battery charger and the ways are they charged. The conventional battery chargers follow two basic methods for electro- transformation of the active plates in the accumulator: with continuous current and with continuous voltage.

It is an advantage of the continuous current method that the arrangement of the appliances is comparatively easy. The basic disadvantage here is the great continuance of the process at low values of the charging current and the un-equable distribution of the current to the slot electrodes - [1].

At the beginning of the continuous voltage charging, the charging current $I_{ch}$ has a comparatively high value that decreases as the process goes lay. The great continuance of the process here an also be pointed as an offset that is due to the very low value of $I_{ch}$ at the end of the process and it considerably lengthens the charging time.

The shortcomings mentioned above, avoided through combining the two basic methods [6].

## Pulse converter with recuperating coil

The network transformation battery chargers that exit easily carry out the basic methods pointed above. Their main shortcomings are the weak power and efficiency they are able to supply and also the significant measurements and weight in the case when it is demanded that the charging current has a high value. All these

inconveniences easily avoided with the help of the pulse converters. In all cases when low power needed, we can use converters working on the principle of backward converters. When high power needed, feed forward converters or multicycle converters more easily carry out the battery charger.

Directly connect the scheme solutions available make it possible for the load is to the power source in these cases when the output voltage of converters is up to about $0.3U_{in}$. When lower $U_{out}$(output voltage) is needed, it is suitable to use galvanic separation of the load and the power source. A connection like this is very proper when converter directly charged from the electric network. As a basic problem here, we can point the over voltage at the plugged power switch, which causes bigger commutation losses when switching the transistor and so, the efficiency considerably decreases. A problem like that easily solved by adding an additional recuperating (demagnetizing) coil – fig. 1. Its purpose is to restrict the voltage of the unplugged switch up two times than power supply, and to return the magnetic energy left into the power source. The number of on additional coil is equal to the number of the primary coil. [3].

Fig.1 presents a model of feed forward converter with recuperating coil. The resistors RL1, RL2, RL3 reflect the active losses of the transformer coils. Racc-the inner resistance of the lead-acid battery, Re – the inner resistance of the power source.

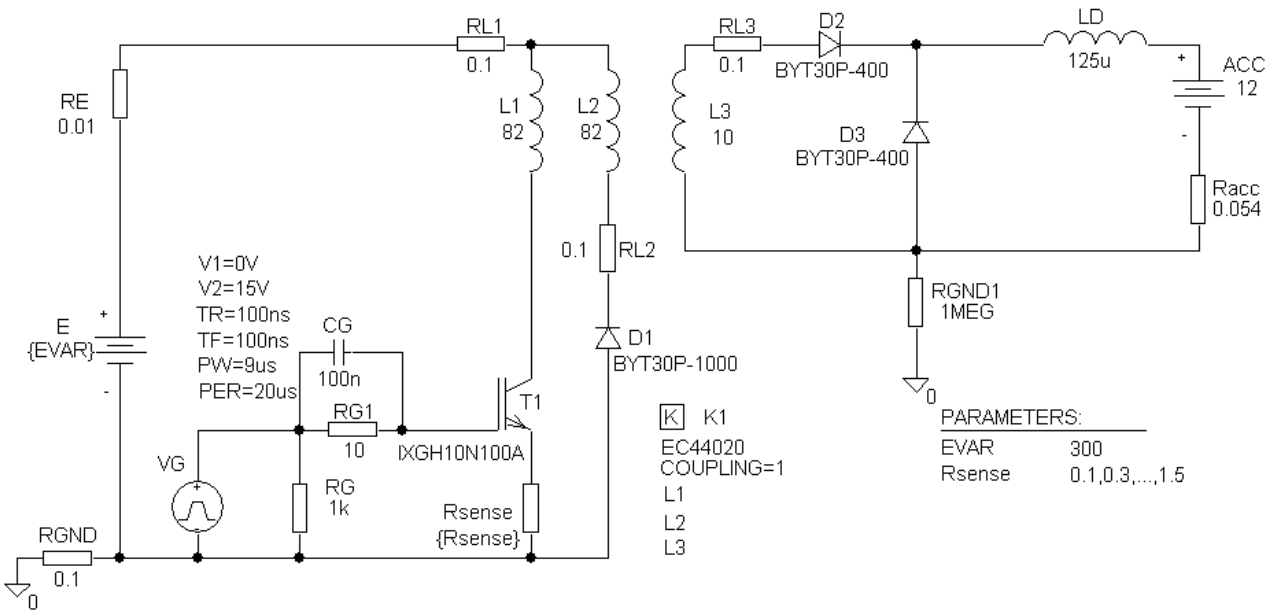


**Fig. 1.** Feed forward converter with recuperating coil.

Fig. 2 shows the time diagrams of a battery charger with recuperating coil $I_{acc}$, $U_{acc}$, $I_c=f(t_u)$, $P_{in}$, $P_{out}=f(t_u)$, $U_{ce}=f(t_u)$.

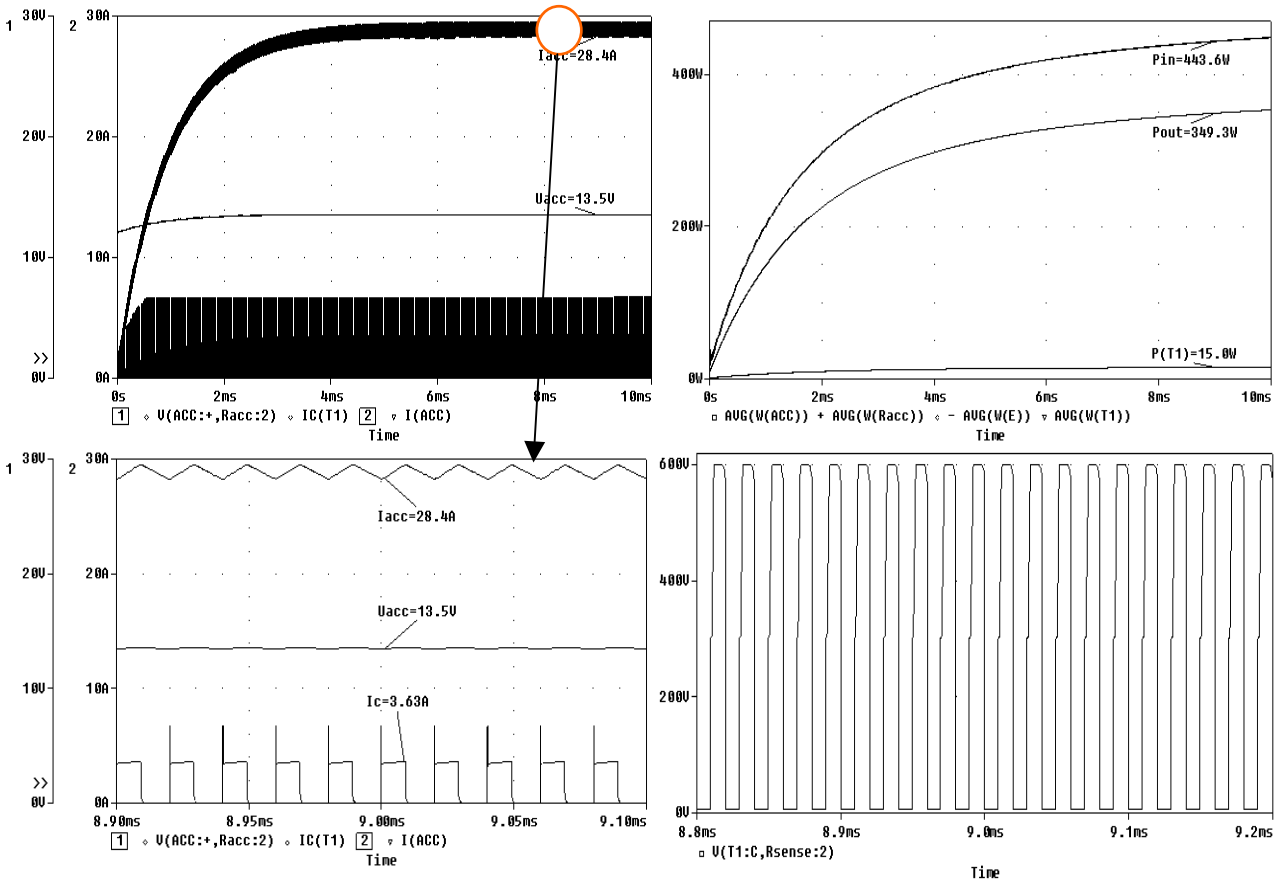


**Fig. 2.** Time diagrams of the feed forward converter used as a battery charger.

The diagrams propose the following conclusions:

1. The voltage at the transistor is restricted to $2U_{in}$=600V.
2. The current through the transistor does not take great peaks.
3. The mechanism efficiency is over 75%.
4. The charging current can be regulated in wide diapasons by altering the time of the unplugged transistor.
5. The transition process lasts grow 1÷3 msec.

**Pulse converter with auto-transformation coil**

Here arises the question whether another scheme carried out for the same purpose, but showing better indicators. It is a characteristic feature of the pulse converter when functioning as a battery charger that it works with the load equal to the load of the recuperating coil on the present scheme. That makes it reasonable to apply the recuperating coil to the load, not to the power source; whish means that the spared energy would go to the load and not to power source. Having in mind that the voltage of the load is much less compared to the supply voltage, we must expect that the number of the windings of the recuperating coil will be much less, than the number of the windings of the primary coil, and the demagnetizing of the transformer's core happens in the load. Fig. 3 presents a PSpice model, the scheme shows that the

frequency of the governing impulses is 50 kHz.

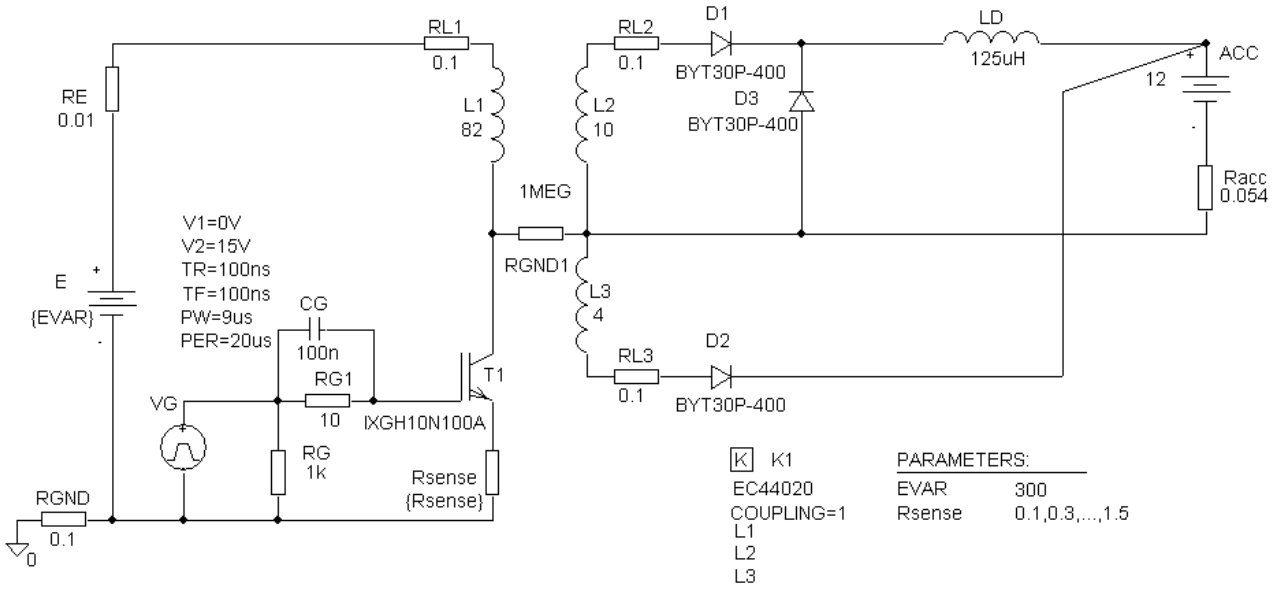


**Fig. 3.** Feed forward converter with auto-transformation coil. – $I_{acc}$, $U_{acc}$, $I_c=f(t_u)$, $P_{in}$, $P_{out}=f(t_u)$, $U_{ce}=f(t_u)$.

Fig.4 presents time- diagrams of the mechanism carried out this way.

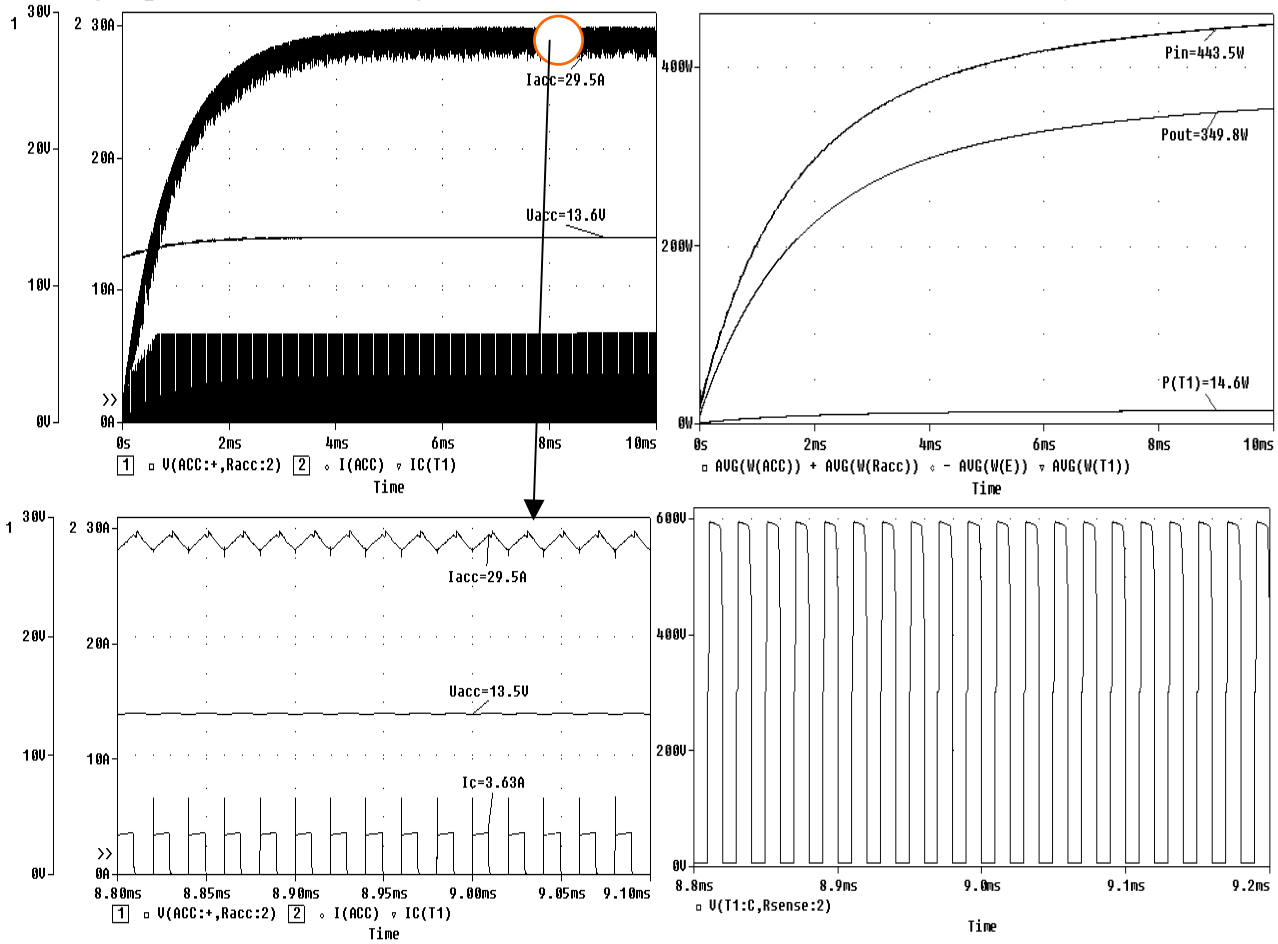


**Fig. 4.** Time diagrams of feed forward converter with auto-transformation coil returning the rest of magnetic energy in the load.

We can make the following conclusions from the presented time-diagrams:

1. The energy efficiency of the both schemes are almost equal.
2. The charging current in this case is a sum of inductor current and the secondary coil current.
3. The second scheme includes much less windings on the recuperating coil and the average loss in the transistor is less.

Fig.5a shows the interdependence of the supplied power $P_{in}$ and consumed power $P_{out}$, in a function from the durability of the control impulse. It is evident that the interdependence of the power characteristics from the filling of the impulse $t_c$ makes the time for diffusing the piled energy in the magnetic core insufficient, and as a result it magnetic core saturate. From this moment, the energy consumed from the power source is transformed in to heat, and causes only the heating of the magnetic core. Fig.5b present the department distribution of the power to the scheme elements when $t_c$=9.2μs. The main loss in the scheme is in the active components of the reactive elements. These interdependencies show that when $t_c$>10.4 μs the energetic parameters of the scheme are getting worse.

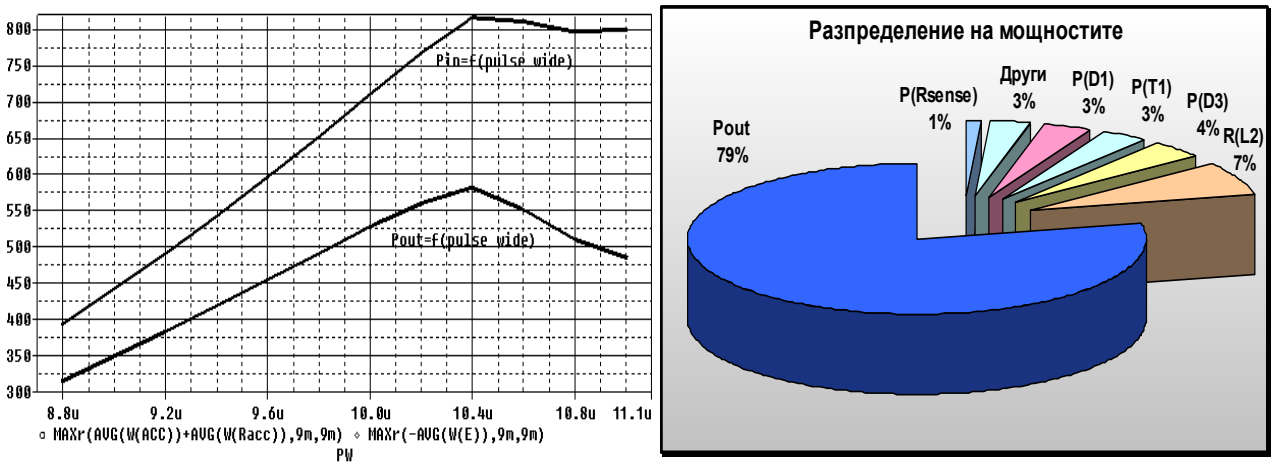


5a 5b

**Fig. 5.** Interdependencies of the input power $P_{in}$ and the consumed power $P_{out}$ fig.5a in a function of the duty factor and the power losses in the scheme elements.

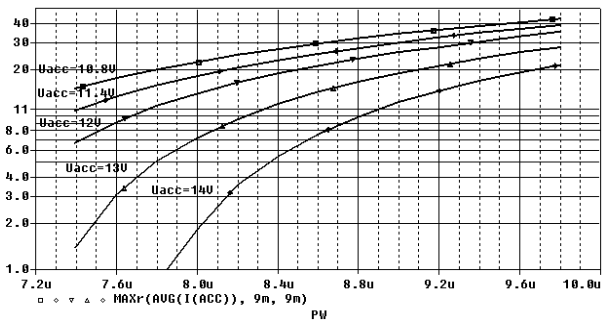


Fig.6 shows the regulating characteristics of the battery charger, which makes it possible for us to choose the optima charging current whish maintains permanent value during the time of charging. The value of $I_{acc}$=const when the change of the $U_{acc}$=10.8÷14 V can be chosen in the limits of 10÷25 A when the change of $t_c$ is 7÷10μs.

**Fig. 6.** Regulation characteristics of the battery charger.

Fig.7 presents the interdependences of some charge current when the supply voltage has different values. The output power and the scheme efficiency are also

shown.

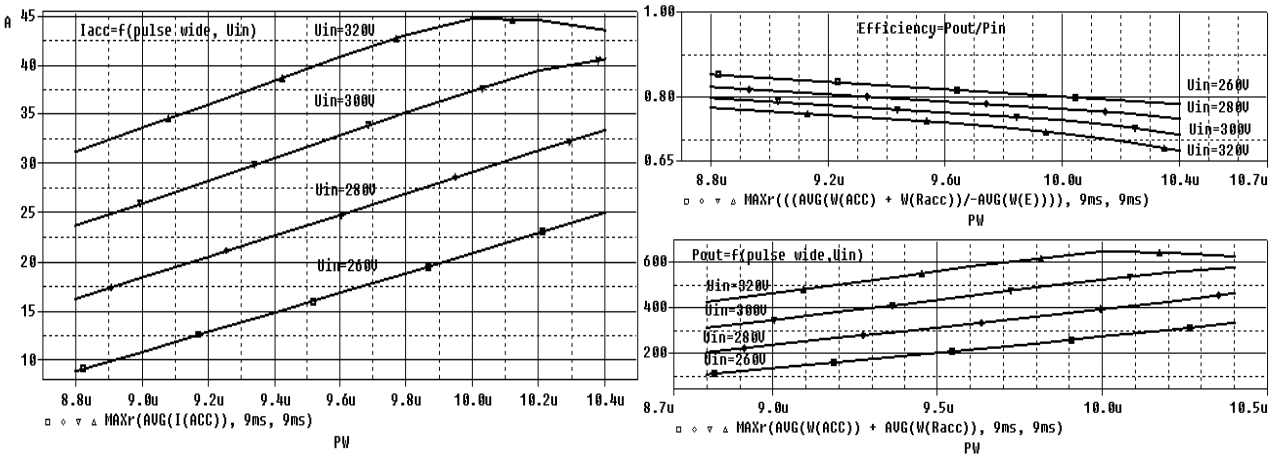


**Fig. 7.** Interdependencies of $I_{acc}$, $P_{out}$, and the efficiency of the scheme with the auto-transformation coil at different value of the supply voltage.

The so presented interdependencies make it clear, that the efficiency of the scheme is growing up with the decreasing of the supply voltage, in the cases when the coefficient of the filling the governing impulses is $t_c \leq 0.5T$. When $t_c \geq 0.5T$, the current keeps changing lineally but the loss in the power transistor is increases and the efficiency of the scheme gets low.

Fig.8 presents the same interdependencies but when the inductance of the DC inductor is changing.

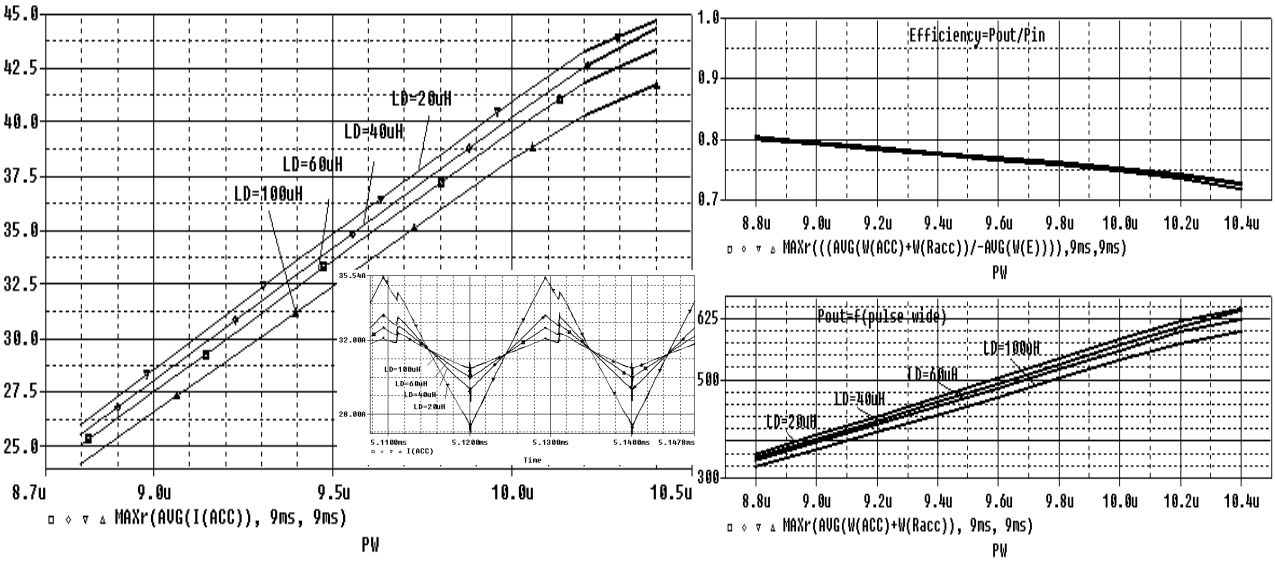


**Fig. 8.** Interdependencies of $I_{acc}$, $P_{out}$ and efficiency at different values of the inductance.

The presented interdependencies show that the change of the inductance affect only the form of the charging current, i.e. the little values cause charging current with big pulsations which in some case may turn to be beneficial for the electro-formation of the battery charger's active body.

## Conclusion

The explorations and the characteristics of the scheme of the auto-transformation coil battery charger that this exploration induced, give the reason for the following conclusions:

1. The scheme has the same energetic indicators like the scheme with recuperating coil, and they can achieved with considerably less number of windings on the additional coil.
2. The charge current and voltage change lineally when the duty factor is $\delta<0.5T$.
3. The loss in the power switch are exponentially increase when duty factor $\delta>0.5T$
4. The loss in the active components of the reactive elements makes the strongest influence on the efficiency of the scheme.
5. The efficiency of the scheme decreases when the input voltage grows up and when the duty factor is $\delta>0.5$ because of the losses in the transistor.
6. The inductance change in the DC inductor changes the form of the charging current without affecting the efficiency of the battery charger.
7. The maximal duty factor of the pulses must not exceed the values 0.5- $\delta_{max}\leq 0.5$ – fig.7.
8. The offered scheme totally satisfies the criteria for battery chargers and can be used with individually or with other mechanisms in order to electroform and charge storage batteries.

## REFERENCES

[1] Gishin St. Accumulators- selection, maintaince, testing and exploitation TU Sofia -2003.
[2] Brown M. Power supply cookbook „Technics" – Sofia 1997.
[3] Yudov D. Power supply devices - Varna 2003.
[4] Моин В.С,. Стабилизированые транзисторные преобразователи – Энергоатомиздат – Москва 1986.
[5] PSpice application for power electronics – Power System Division – Onyx Technologies Inc.
[6] Kurt Hesse, An off-line lead acid chargerbased on the UC3909 – Unitrode Corporation apnote.