DSP MICROCONTROLERS ARE BLURRING THE BORDER BETWEEN INTELLIGENT SENSORS AND SOPHISTICATED INSTRUMENTS

Josif Kosev, Vladica Sark

Faculty of Electrical Engineering, SS. Cyril and Methodius University, Karpos 2 bb, 1000 Skopje, Macedonia, phone: +389 2 3099 102, j.kosev@ieee.org, sark@mt.net.mk

Keywords: DSP, intelligent sensor, vibration, MEMS accelerometer

Recent developments and standards in intelligent sensors are emphasized. Machine vibration measurements are briefly discussed. Newly designed DSP-based intelligent sensor for vibration measurement is presented. Measurement setup for sensor testing is established. The results are compared with a reference measuring instrument. Excellent agreement of the results is obtained.

1. INTRODUCTION

Recent trends in sensor development lead towards incorporating more and more functions into an intelligent sensor and standardization of those functions [1]. Tremendously reduced price of microcontrollers and at the same time their increased functionality provides the instrument designers with powerful tools even at the hand-held battery-powered level [2], [3].

Not so far, vibration measurement was tedious and expensive work [4]. Even nowadays professional vibration measurement instruments are expensive [5], and so are the sensors they use [6].

This work is an attempt to incorporate the measurement and analysis power of an expensive vibration-measurement instrument into a "high IQ" intelligent sensor while keeping the price at a low level.

1.1 Recent intelligent sensors developments

Smart sensors (and generally transducers) are defined as sensors (transducers) that provide additional functionality besides the representation of the sensed (and/or controlled) physical quantity. According to IEEE P1451 drafts this functionality includes:

- Embedded information about the transducer and its performance in a standardized format in a small amount of nonvolatile memory,
- Self-identification to a measuring and/or control system at power up, to enable automatic vendor-independent configuration and diagnostic of the system

Standardization of these features is intended to increase interoperability.

These features can be accomplished by incorporating a tiny microcontroller into the sensor and provide the popular "plug and play" functionality. The benefits are multiple: easy installation of sensors, fast replacement, simple plant data-base registering, automatic calibration-data update ... All this leads towards easy building of sensor networks.

Nevertheless, more intensive data processing and data logging is left to the main system computer or to a sophisticated instrument.

1.2 Some recent DSP developments

DSPs are known for their highly optimized pipelined multiply-accumulate (MAC) architecture necessary for specialized mathematical operations such as convolution or Fourier analysis. It distinguishes them from the standard microcontrollers that are usually reach in peripherals: I/O, A/D, serial communication, timers, on-chip RAM and ROM (usually EEPROM and recently FLASH).

Nowadays this border is blurred by the introduction of DSP microcontrollers that incorporate both functionalities – of a DSP and of a microcontroller. The most typical are the so called "motor control chips". These chips contain a DSP core and reach set of peripherals: A/D, standard I/O, Timers, Universal Asynchronous Receiver Transmitter (UART), Serial Peripheral Interface (SPI), Controller Area Network (CAN), PWM outputs, several kilowords of RAM and also FLASH for program and for data storage that is in-circuit programmable and (recently) in-operation programmable. This enables the smart sensor designers to add a **number-crunching functionality** to their sensors, previously only available in sophisticated instruments and/or computers.

2. MACHINE VIBRATION MONITORING

Monitoring of machine vibrations provides machine health assessing. Vibration measurements are performed at the bearings and/or shaft housings where data loggers are connected periodically and vibration data are recorded. Accelerometers are used as signal sources and data are processed by input filtering and amplification. The final processing is spectral analysis.

Early data loggers included bandpass filters with variable center frequency and recorded spectral components on a paper tape, or performed magnetic recording of the time-signal for further processing with computer (A/D conversion and Fourier analysis) [4].

Contemporary data loggers perform real-time A/D conversion and FFT and display both – time and spectral data. Further processing includes speed and/or displacement calculation, RMS values, peak values and deep memory for data logging [5]. Data can be transferred later to a computer, kept in a database and processed by special software for machine health monitoring.

3. THE VIBRATION SENSOR

The basic idea is to perform most of the functionality of the contemporary data loggers but at a level of an intelligent sensor.

3.1 Sensor hardware

The hart of this sensor-instrument is the MC56F8322 DSP microcontroller operating at 60MIPS, and a MEMS accelerometer with some analog preprocessing (amplification and anti-alias filtering). The block-diagram of the sensor is presented in Fig.1.

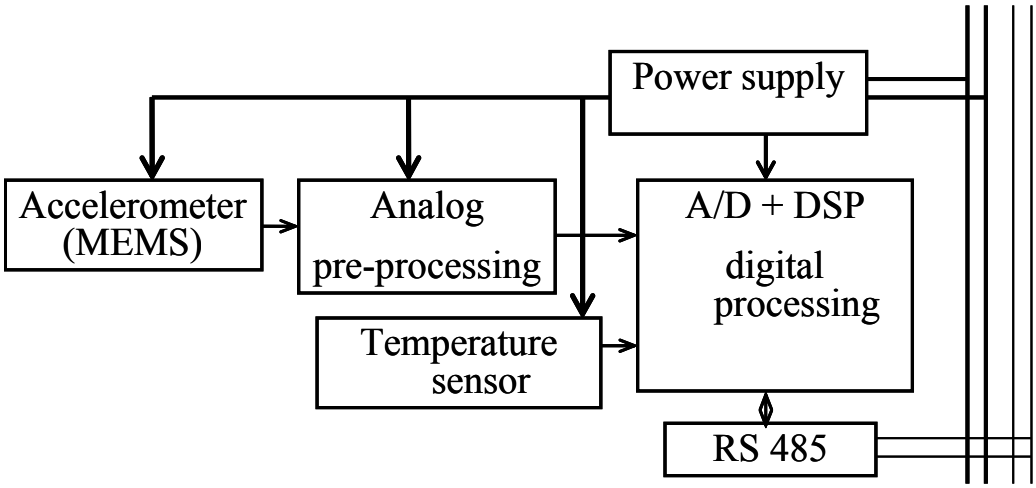

Fig.1 Sensor block-diagram

The sensor is intended for configuring a measurement/monitoring system as shown in Fig. 2.

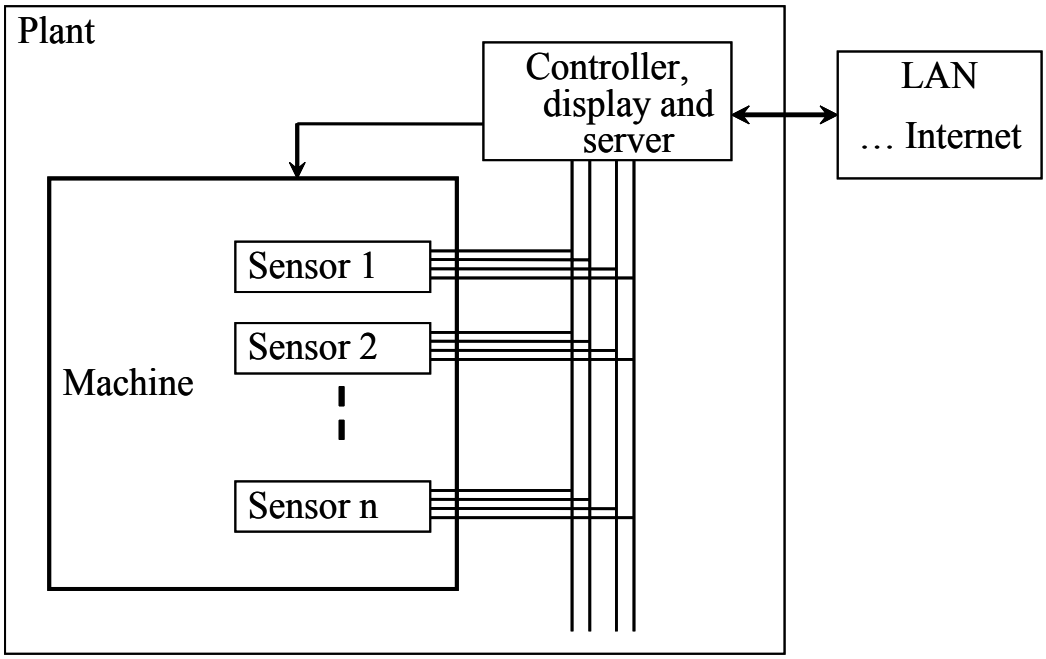

Fig. 2 Monitoring system block-diagram

3.2 Sensor software and signal processing

The processor itself has 32 KB of program flash and 8 KB of boot flash. This is more than enough for writing the software in mid or high level programming language. Additionally, C-efficient architecture of the core enables C programs to run equally good as assembly programs. Not to mention the complexity of assembly programming.

The software is developed with Metrowerks CodeWarrior IDE. A special tool called Processor Expert, included in this software, allows object oriented like software development. (True object oriented programming is too demanding for the resources available and is not implemented in this compiler.)

The software consists of two functionally different parts: control functions and signal processing functions as shown on Fig. 3.

The calculations were performed using 16 bit fractional and integer arithmetic. Intermediate 32-bit arithmetic was deployed to preserve the precision and avoid

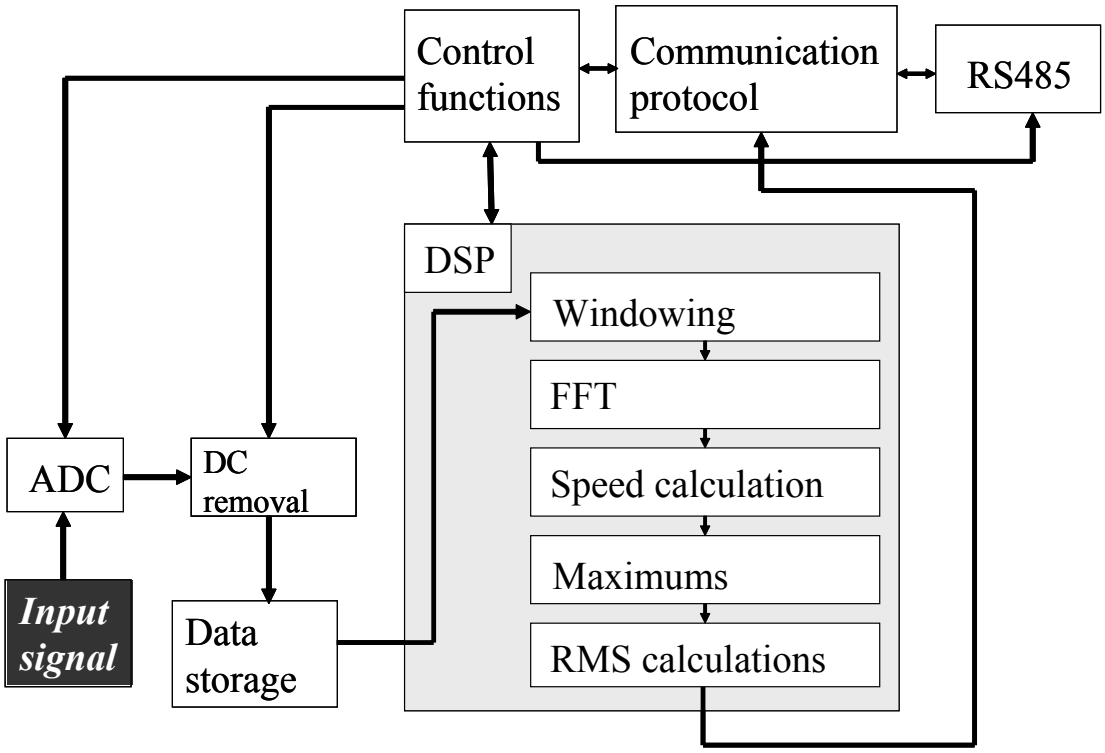

Fig.3 The sensor software functional diagram

overflow within the large calculation dynamic range.

Special software in Delphi for a temporary PC-platform controller was developed for sensor calibration, data acquisition and display. The user interface screen is shown in Fig. 4 and data display screen is shown in Fig. 6. Another module for boot-loading of the DSP program into the program flash was also built.

4. TEST-SETUP AND MEASUREMENT RESULTS

A 3-phase AC induction motor and unbalanced mass attached to the rotor was used as vibrations source (Fig. 5.).

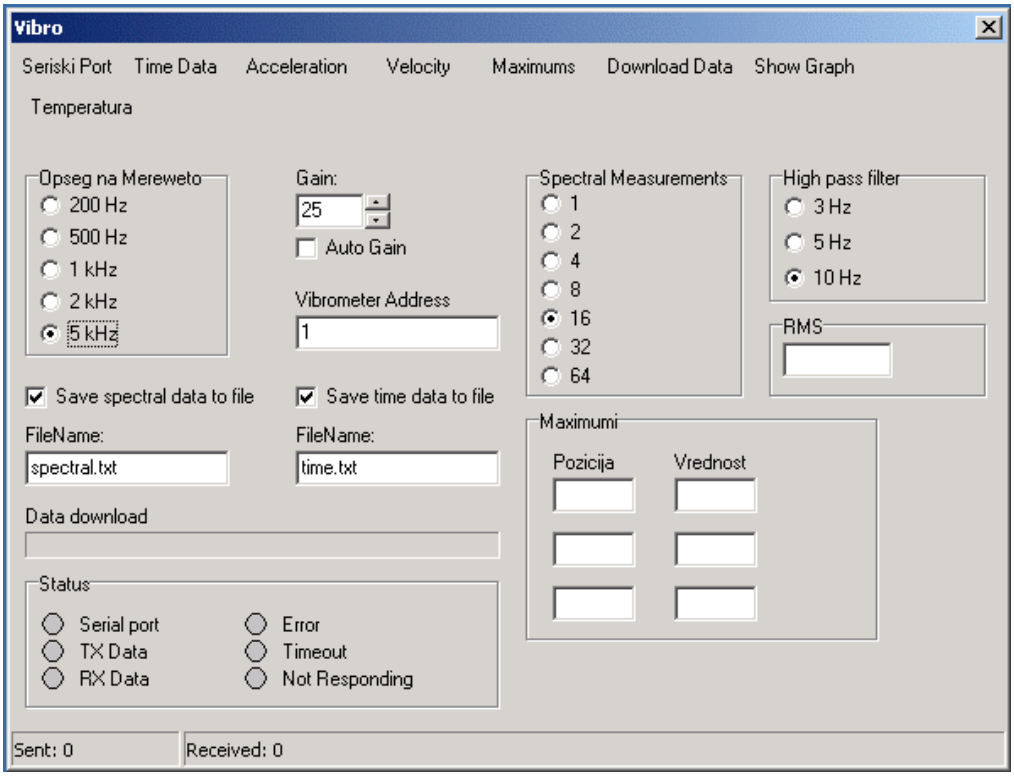

Fig.4 User interface and data display for the PC-platform controller

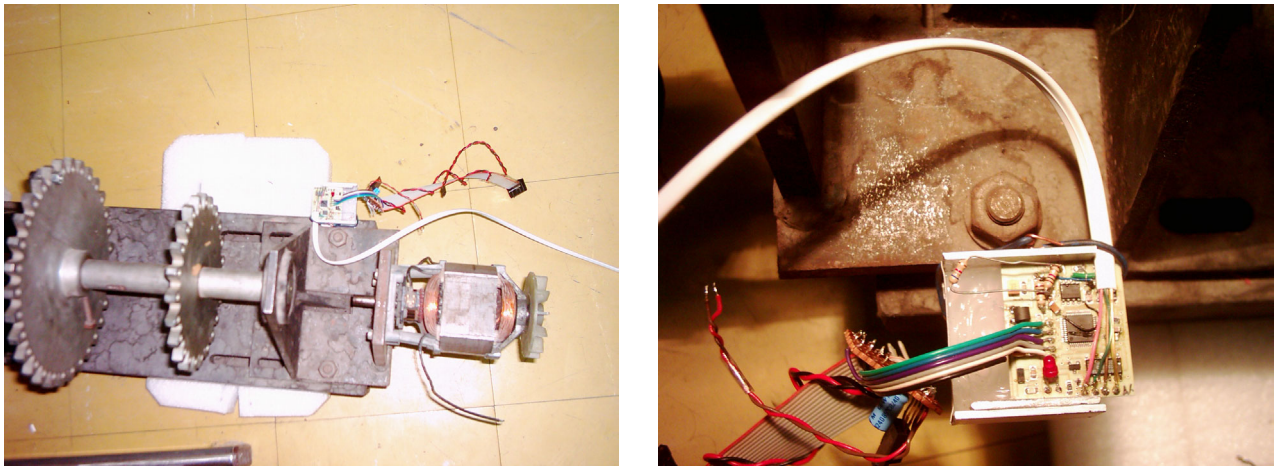

Fig.5 The test-setup

The system was compared with MICROLOG - vibration logger and PRISM – database and display system from SKF. (MICROLOG is capable of performing real – time STFT and it can also execute FFT and store data into memory for later download to PRISM database.) Fig. 6 shows a sample speed spectra in a case of 1000Hz bandwidth. Sensor data are raw (not scaled to physical units) but the

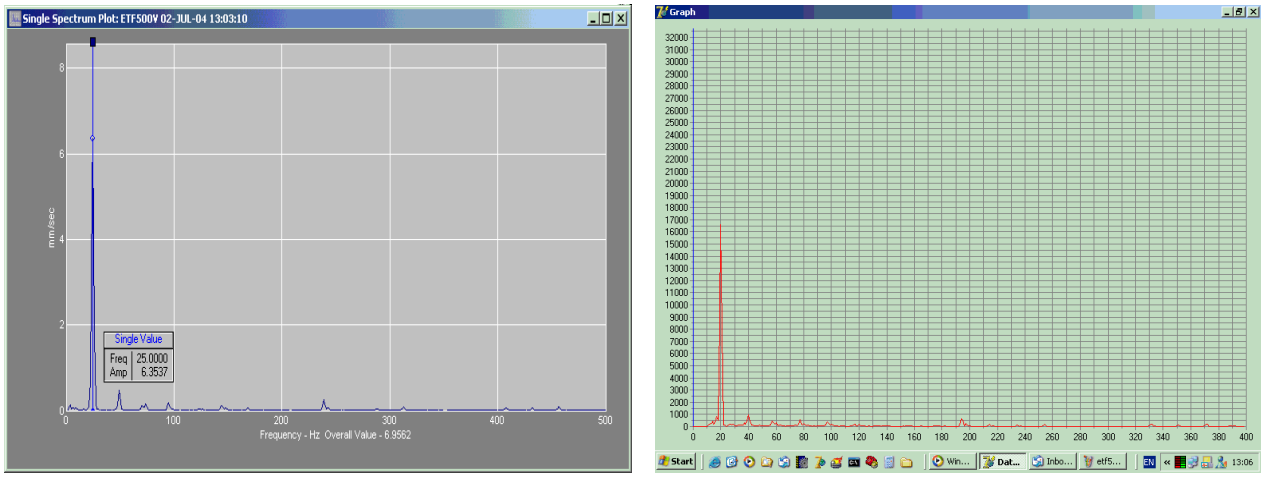

Fig.6 Sample spectral data in PRISM database (left) compared with raw spectral data downloaded from sensor (right)

waveforms are evidently in excellent agreement. (The two sensors are placed very close but under no circumstances can absolutely identical diagrams be expected.)

Careless implementation of 16bit factional arithmetic for scaling introduced unpleasant calculation overflows in case of high acceleration values, but 32bit intermediate calculations promise to resolve the problem. (The new scaling routines are not yet completed.)

5. CONCLUSIONS

Intelligent sensors are becoming predominant paradigm in sensor design and implementation. No future design should ignore it.

DSP microcontrollers appear as one of the key components for increased sensor "intelligence" and push the sensor limits into the instrument area.

The design presented in this article opens new application field by providing sophisticated functions within the sensor bundle.

6. REFERENCES

[1] Kang B. Lee, Richard D. Schneeman, "A Standardized Approach for Transducer Interfacing: Implementing IEEE-P1451 Smart Transducer Interface Draft Standards", US-NIST, Gaithersburg, Maryland 20899 USA

[2] C. V. Gavrovski, M. A. Makraduli, J. G. Kosev "Microcontroller based portable dosimeter for x and γ radiation" Electronics EE'99, Sozopol, 1999

[3] Kosev J., Makraduli M., Minovski R., "Microprocessor instrument for time skew measurement of power switch contacts ", ETAN, Kopaonik, 1992 (in Macedonian)

[4] Prof. Jens Tempre Broch, "Mechanical Vibration and Shock Measurement", Bruel & Kjaer, October 1980

[5] www.skf.com

[6] www.endevco.com