CIRCUIT FOR CONTROL OF SOLID - STATE ANALOGUES OF INFRARED VISION DEVICES

Ivelina Stefanova Stoeva, Ivan Stanchev Kolev

Department of Electronics, Technical University – Gabrovo, Street "Hadji Dimiter" No. 4, 5300 Gabrovo, Bulgaria, phone: +359 66 801064, 223-433; e-mail: ivstoeva@yahoo.com

Keywords: Infrared vision devices, Control circuit, Multi-element photodetectors, CCD and CMOS matrixes.

Recently a lot of infrared night vision devices appeared in civil life. They have various constructive features but are working by one and the same principle, namely the electrons knocked – out of the photocathode are amplified by electrical lenses and fall on the anode which is actually a screen. This principle has several disadvantages one of which is the need of a high voltage supply – several kV and bad resolution ability. The aim of this work is to develop a solid-state analogue of the existing lamp version of the infrared night vision device. The development of multi-element photodetectors and indicator devices in optoelectronics makes it possible to solve this problem. Actually, an image intensifier has been worked out. The receiving part in it is in the infrared part of the spectrum and the indicator part is in the visible area of the spectrum. The device that has been worked out has a high resolution ability and a low voltage supply need of about 12V which allows to be produced in portable form.

1. NIGHT VISION DEVICES (NVD)

The device is worked out in two versions: a static one, in which each point of the input image corresponds to a point of screen; and a dynamic one, in which the image is scanned at the input and is received at the output. Infrared light emitting diodes (LED) are used as light sources, and green light emitting diodes as indicators. For the dynamic version CCD or CMOS matrix is used as photodetectors, and modern flat TFT screens as indicators.

A principle circuit diagram of conversion module input-output image is given and methods for measuring are offered. The major parameters of the device, like resolution ability, level of infrared background, voltage supply, consumed current, as well as some non-electrical parameters, are given.

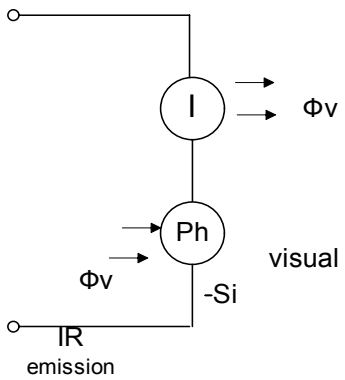

Fig.1

The fields of application of the solid-state analogue are in security and military equipment, for hunting and fishing, etc.

Figure 1 shows the use of several connections between the source of light and the photodetector with external optical connection. A circuitry of the night vision device is shown on figure 2.

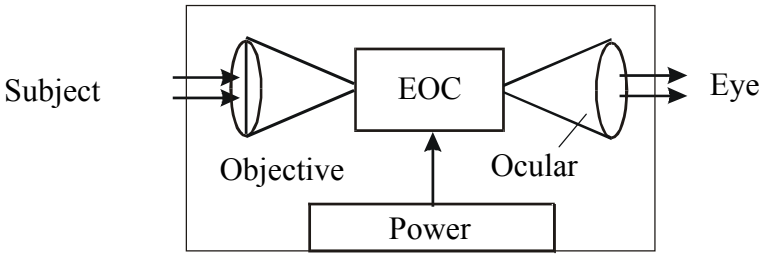

Fig.2

The basis of night vision devices is the electrooptical converter.

Night vision devices are divided into:

- Passive – which rely on the infrared emission of the background;
- Active – which have their own infrared search light.

Night vision devices are two types:

- with a single camera – fig.3
- with several cameras – fig.4

The elements of the device are the following:

1– photocathode; 2– vacuum balloon; 3– electronic lens

The photocathode is sensitive to the infrared part of the spectrum (for instance 1,5 μm). A visual image (520-550nm) in the green part of the spectrum is obtained on the luminescence screen. That is the reason for the electrooptical converters to be called converters of light (infrared into visual).

A more detailed construction of a night vision device with a single camera is show on fig.3, where:

1– is the object of surveillance; 2 – is the objective; 3 – is the optical image of the object; 4 – photocathode of the electrooptical converter; 5 – focusing device; 6 – anode; 7 – electronic image of the object; 8 – ocular; 9 – output window of the device; 10 – low voltage battery; 11 – high voltage block for supply of the electrooptical converter

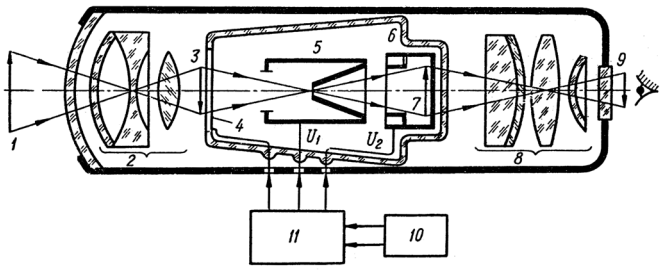

Fig.3

The image on the screen is rotated at 180º compared with that on the photocathode. The amplifying of the electrooptical converters with a single camera is 20……40^{x}. The photocathode works by outer emission (absorbing infrared emission from the photocathode and emission of electrons from the same one). The electrooptical converters with multi cameras consist of a cascade connected single camera electrooptical converters. In this way the luminance is amplified in series from one cascade to another. Amplifying more than 50 000^{x} is unsuitable. This amplifying is enough for differentiating objects from the sky light. Apart from an electrooptical converter the night vision devices have an objective (directed towards the object) and an ocular (directed towards the eye of the observer). The infrared sights (up to 500m), the infrared binoculars, the infrared helmet binoculars, etc. were created by the night vision devices.

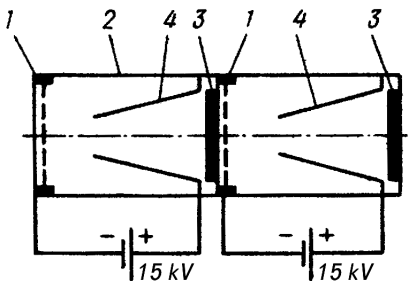

Fig. 4

The use of an optical fiber bundle for the night vision device implementation

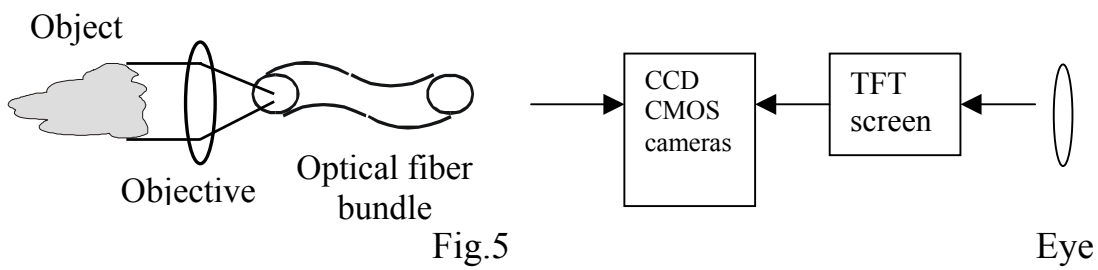

Fig.5

An image can be transmitted by a bundle if optical fiber (multi-core light guide). The bundle has to be done in such a way that the ends of the optical fibers at the output have to correspond precisely to those at the input. The image is focused by lenses over the bundle.

Each fiber transmits a definite element of the image of the particular object. The image is diffracted in s great number of elementary parts in order to be able to be transmitted at a distance. The image consists of a great number of point which are with a diameter equal to that one of the fibers, the image has mosaic structure like that one in CCD matrixes. It is actually an optical raster, which consists of light emitting diodes. The transmitted information is two-dimensional (flat). The fibers are glued at both ends of the bundle and their face surfaces are polished. The image is observed directly (if the bundle is with a big diameter) or by an optical system

(lenses, microscopes, oculars). [2].

Basic characteristics:

– fiber diameter;
– number of fibers;
– numerical aperture;
– damping (bundle transparency);
– resolution (the minimal distance between two points of the image)

1.1 Vacuum optical image receivers – dissectors, orthicons, pyrovidicones, superorthicons, vidicones, iconoscopes, plumbicones, skaitrones.

1.2 Solid-state image converter

– CCD cameras;
– CMOS cameras.

The number of sensitive elements is up to several hundreds of thousands in s matrix with dimensions for instance (6 x 6) mm (2003 – 1600 x 1200 pixels).

The cameras are divided are:

– black-and-white (min illumination – 0,01 lx);
– colour cameras (min illumination – 3 lx),which could be divided in analogue and digital cameras.

The cameras are working in the visible and invisible near infrared spectrum.

Infrared cameras – mainly used for night surveillance

They could be black-and-white and colour cameras:

– with a built-in infrared source;
– without a built-in infrared source.

The infrared cameras are divided into:

– dome cameras;
– cylindrical cameras;
– parallelepiped cameras;
– plate cameras.

Depending on the assembly the infrared cameras are divided onto:

– internal; outer; hidden.

The IR cameras can be put inside: the PID detector; the smoke detector; clock; a spy-hole; an electric wall-fitting.

The black-and-white CCD camera of Conrad company has the following basic characteristics:

– voltage supply – UCC = 12 V (9 – 15) V;
– current consumed – ICC = 100 mA;
– video output – 1Vp–p/75 Ω;
– line frequency – 15625 Hz;
– frame frequency – 50 Hz;
– horizontal resolution – 380 lines;
– number of pixels – 291 000 → 500(H) x 582(V);
– minimal sensitivity – 1 lx;
– objective with focus distance f = 3,6 mm;

– diaphrame – 2 mm;
– angle of vision - diagonally 92°;
– working temperature range – (–10 ÷ +45)°C;
– weight – 20g;
– sizes – (40 x 40 x 27) mm.

Colour VHS CCD camera, type GR – A X 200 manufactured by JVC(Japan) with characteristics as follows:

– format – VHS PAL;
– supply – 6V DC/5,7 W;
– tape speed – 23,39 mm/s;
– cassettes – 30 or 45 min;
– CCD matrix sizes – 1/4″;
– minimal illumination – 3 lx;
– работна осветеност – (3 – 100 000) lx;
– video output – 1V/75 Ω;
– audio output – 8 dB/1 kΩ.

Figure 6 shows a spectral characteristic of a Si-CCD camera.

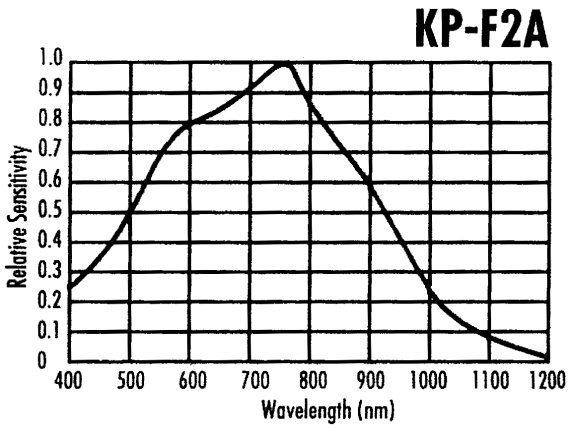

Fig.6

Figure 7 shows a principle diagram of the worked-out solid-state analogue of the night vision device.

Parameters of the worked-out-device:

1. Voltage supply– 12V
2. Spectral range at the input – λ=(800-1000)nm
3. Indicator light emitting diodes – matrix green light emitting diode (100 x 100pixels) – λ=555nm
4. Photodetector – PIN ФД – λp =900nm
5. Range of activity – 50m
6. Current consumed – 200mA
7. Dynamic range – 60dB
8. Illumination – 1 lx
9. Current (at dark) of the photodiodes with choice <1nA

The spectral sensitivity of the photodetectors corresponds with the curved line shown on fig.6. The operational amplifiers are working like converters-current-voltage. The output voltage and the current through LED are defined by the following expressions:

$$U_o = R_1 . I_{ph}$$

$$I_F = \frac{Ucc - Uo - U_F}{R_2} \qquad (1, 2)$$

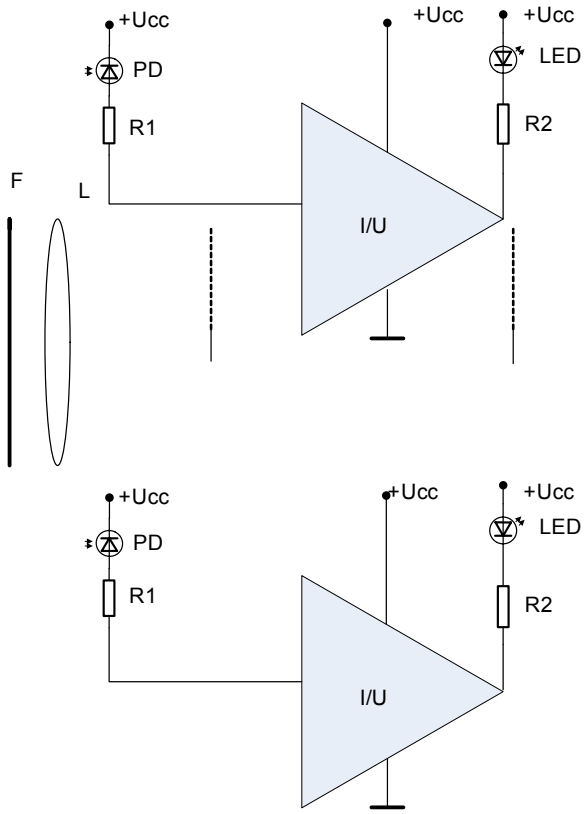

Фиг.7

Conclusion: Two versions of the night vision device have been worked-out-a solid-state version with photodiode and light-emitting matrix, and a solid-state analogue with optical fiber bundle, CCD camera and TFT screen.

2. REFERENCES

[1] Колев, И. С. Оптоелектронни системи. Габрово, Унив. изд. "В. Априлов", 2003.

[2] Колев, И. С. Инфрачервена оптоелектроника. Габрово, Унив. изд. "В. Априлов", 2004.

[3] WWW.ORAGIE.COM