GENERATOR FOR STANDARD TV SIGNALS

Jivko Kostadinov Georgiev, Simeon Nikolov Hristov, Petia Sabeva Stoinova, Nadejda Vasileva Spasova,

Technical University- United Technical College–Botevgrad, Bulgarie, e-mail:siel2000@abv.bg

Keywords: generator, modulator, frequency, converter, microcontroller, encoder

The paper describes the results obtained by the development of a generator for standard TV signals intended for measurement and adjustment several television systems. The generator comprises following main blocks: PIC microcontroller, AUDIO generator, RGB encoder, TV modulator, RF converter and amplifiers for the different frequencies. The PIC microcontroller is intended for controlling of the all general functions of the generator and besides for producing the necessary signals that are passed to the inputs of the RGB encoder. The output RF signal is produced directly by a TV modulator in the frequency range 450 ÷ 900MHz and after conversion by RF converter in the range 30 ÷ 500MHz.

1. INTRODUCTION

Many different fields of the television technique demand to be used standard test signals, for example, for the measurement and adjustment of cable television networks, repairing of television receivers and for education processes. For these purposes, from the authors is designed a generator, that by utilization of up-to-date integrated circuits and an appropriate software are satisfied all technical requirements at lower production cost.

2. GENERAL BLOCK DIAGRAM

In ***Figure 1*** is shown the general block diagram of the designed generator and in ***Figure 2*** are represented the main frequencies of the different blocks.

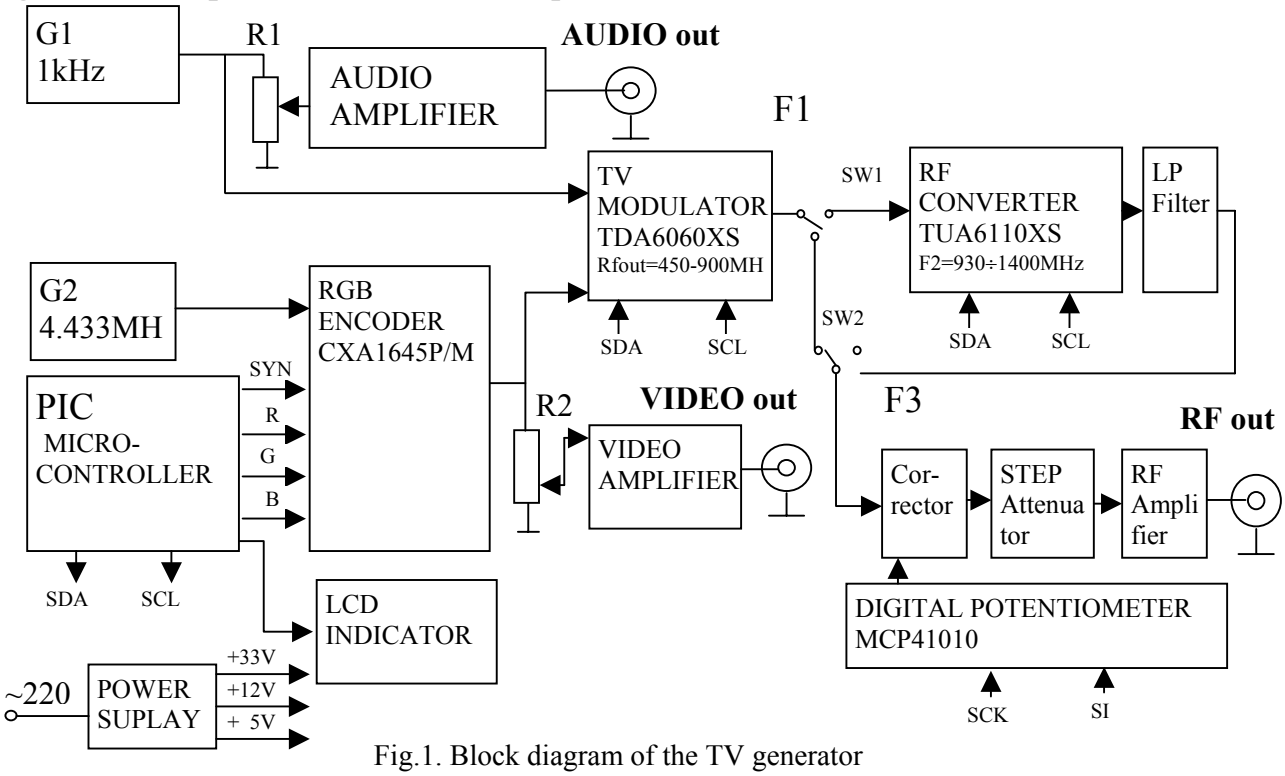

Fig.1. Block diagram of the TV generator

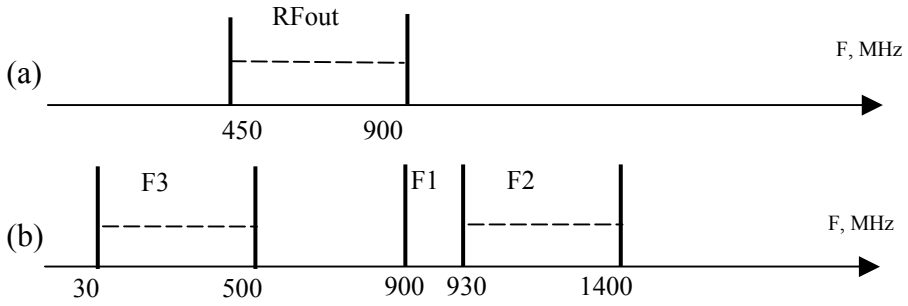

Fig.2. Output frequency of the TV modulator (a) and frequencies of the RF converter (b).

The generator G1 generates an AUDIO signal with frequency 1kHz.This signal is regulated and amplified by the potentiometer R1 and AUDIO AMPLIFIER, respectively and then it is passed to 'AUDIO out'. The unregulated AUDIO signal is fed to the AUDIO input of the TV MODULATOR.

The PIC MICROCONTROLLER is used to control the main blocks by an interface I2C and generating the input signals of the RGB ENCODER. The RGB ENCODER receives the signals from the PIC MICROCONTROLLER and the signal 4.433MHz from the generator G2. These signals are converted by the RGB ENCODER in a standard PAL VIDEO signal that is regulated and amplified by the potentiometer R2 and VIDEO AMPLIFIER. From the output 'VIDEO out' this signal can be used as a test signal for many measurements.

For a purpose to get RF signals are used the TV MODULATOR and the RF CONVERTER. The TV MODULATOR converts the AUDIO and VIDEO signals which are fed to their inputs to RF signal in the frequency range RFout=450 ÷ 900MHz. For frequency range F3=30÷450MHz is used RF CONVERTER (where F3= F2 – F1=(930÷1400)-900 MHz). The converted signal is filtered by a low pass filter connected to the output of the RF CONVERTER. This signal flows via the PIN switches SW1 and SW2 that are controlled by PIC MICROCONTROLLER.

After the switches, the RF signal is passed to the CORRECTOR formed as a PIN attenuator. The program controlled voltage from the DIGITAL POTENTIOMETER corrects the RF signal to a constant level for all frequencies. The corrected RF signal is attenuated by the manually switched STEP ATTENUATOR and amplified from the RF AMPLIFIER to output - "RF out".

The LCD INDICATOR connected to the PIC MICROCONTROLLER shows the frequency of the output RF signal and the difference between the video and audio carrier frequencies of 5.5MHz or 6.5 MHz.

3. MAIN BLOCKS OF THE GENERATOR

In the following presentation are described schematic diagrams of the main blocks of the generator.

3.1. Generating of the main signals.

Figure 3 shows schematic diagram of the RGB ENCODER realized with the integrated circuit CXA 1645P/M. The PIC MICROCONTROLLER generates RGB and SYNCHRO signals which are fed to the inputs of the RGB ENCODER. The RGB signals is formed in 10 different combinations consecutive selected by the button B connected to pin 13.

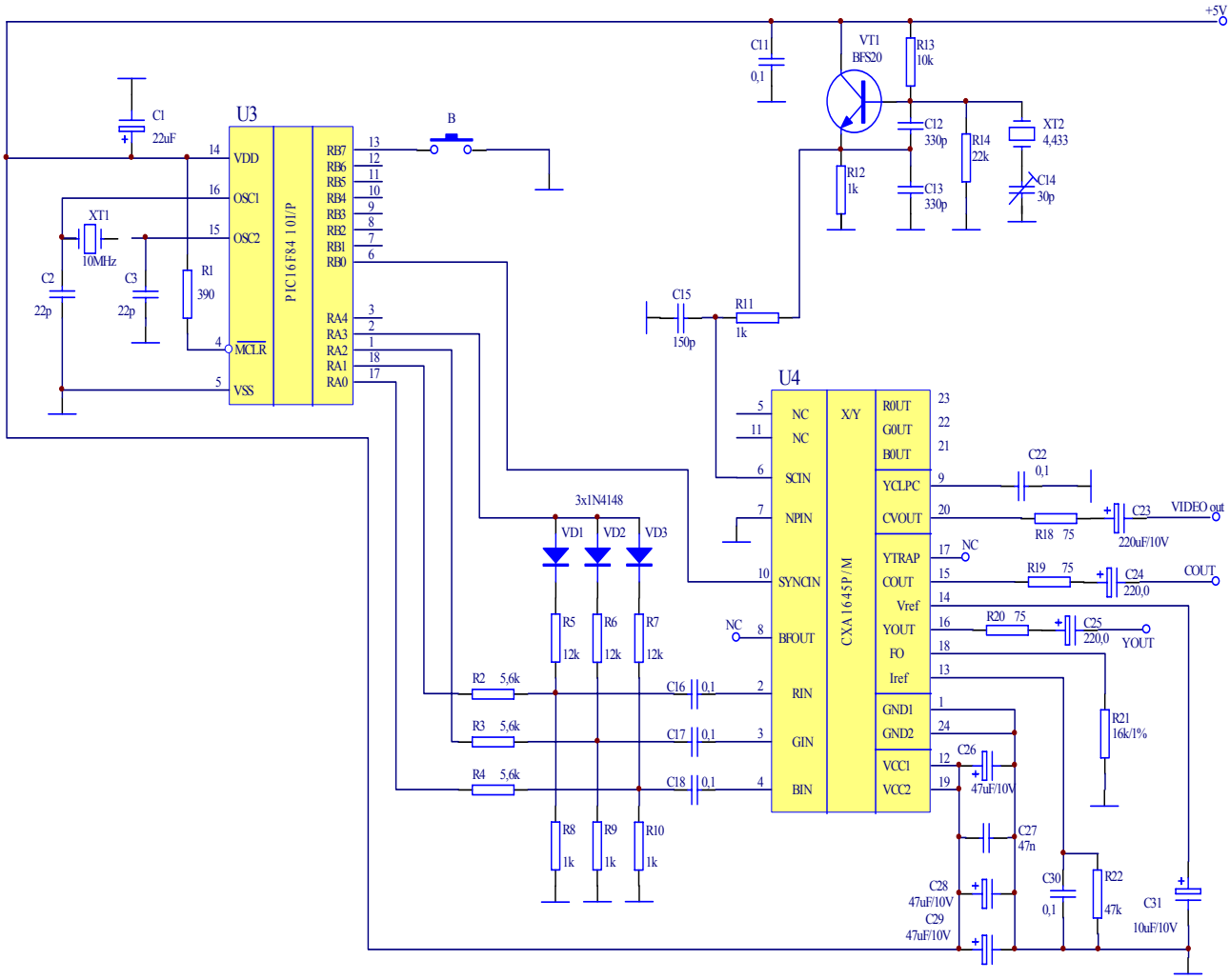

Fig. 3. Schematic diagram of the RGB encoder.

From these signals and with the signal F=4.433MHz of the Clappe generator realized by the transistor VT1, is get a color VIDEO signal at pin 20 of the RGB ENCODER.

3.2. Modulation and converting

In **Figure 4** is shown the schematic diagram of a modulator realized with the integrated circuit TDA6060XS and few external components. The AUDIO and VIDEO signals are fed to the pin 2 and 24, respectively. The generated frequency in a range 450 ÷ 900MHz and the all parameters of the modulation are determined from PIC MICROCONTROLLER by I2C interface.

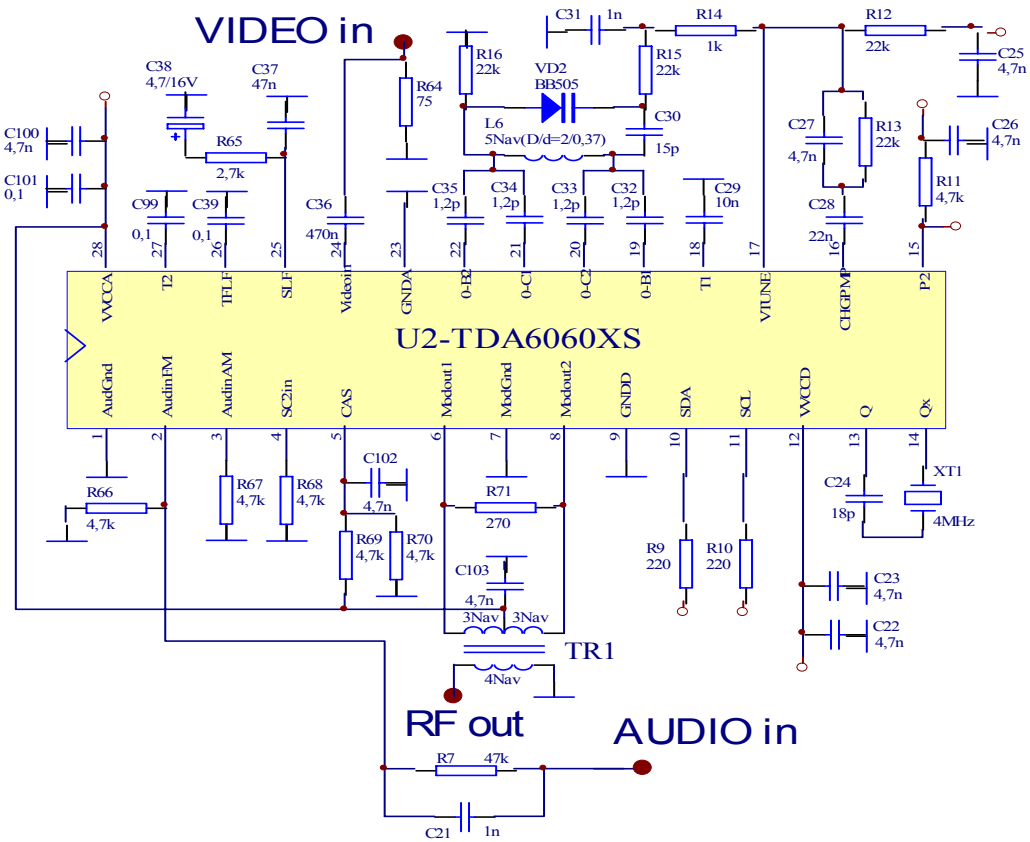

Fig. 4. Modulator.

Figure 5 shows the schematic diagram of a converter realized with the integrated circuit TUA6110XS converting the signal RFin = F1 = 900MHz to the signal RFout = 30 ÷ 500MHz. The concrete frequency of the RFout=F3 is determined by I2C also.

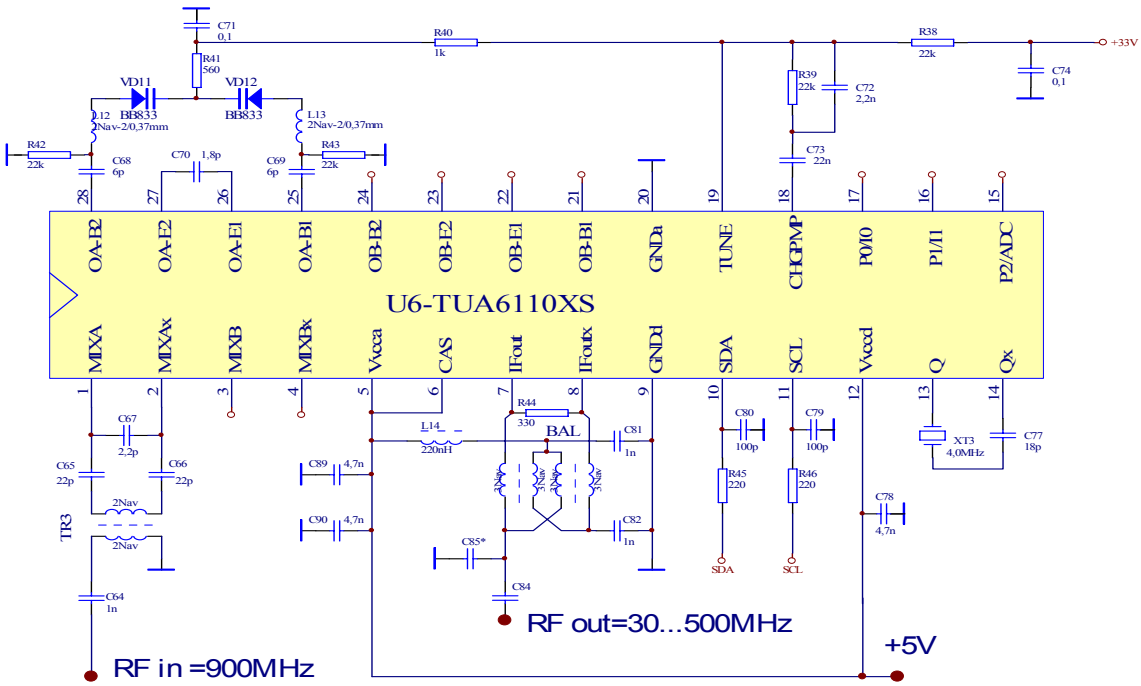

Fig. 5. RF converter.

3.3. Filtering of the converted signals.

In this converter are used frequencies in a outside region of the range 30÷500 MHz and for this reason after its output can be used a very simple low pass filter. ***Figure 6*** shows the schematic diagram of the low pass filter with cut-off frequency Fs = 500MHz and its the transfer (S21) and reflection (S11) scattering parameters.

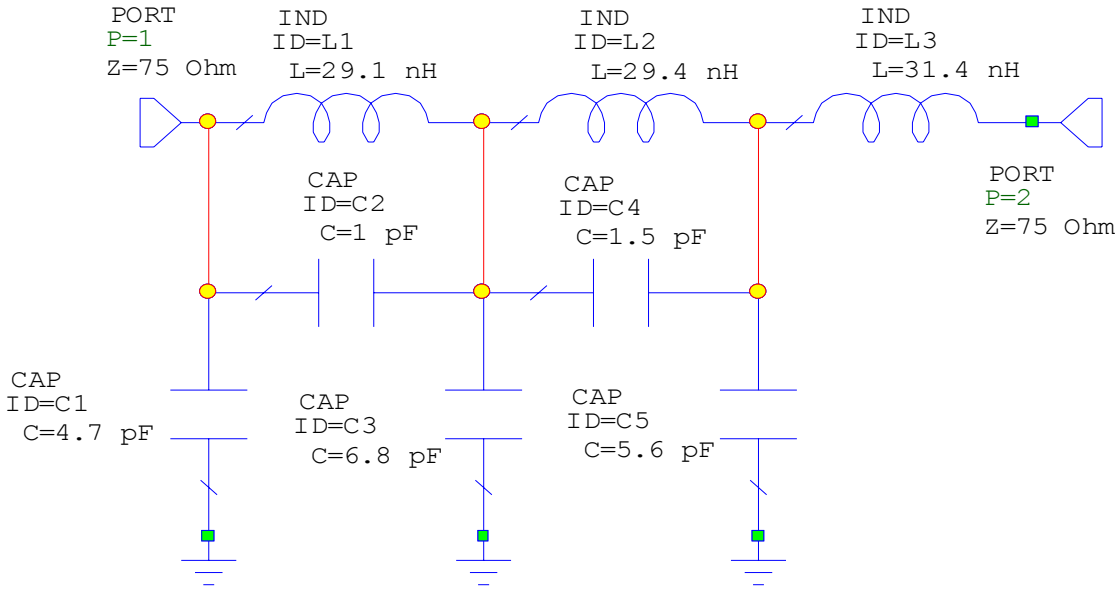

Fig. 6(a). Low pass filter.

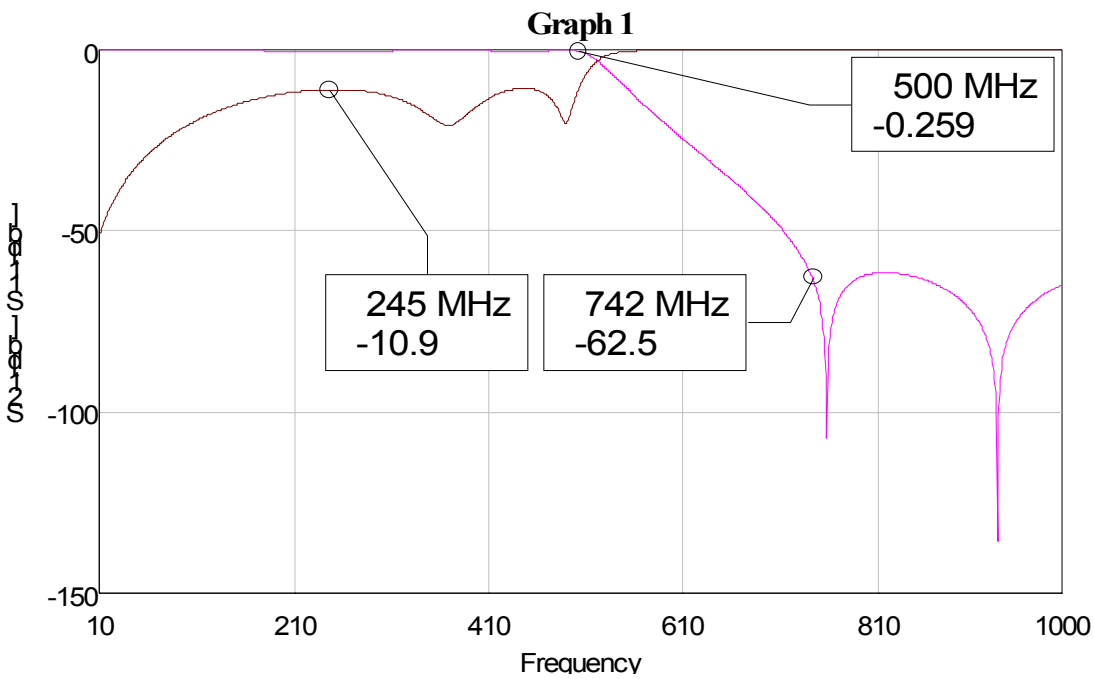

Fig. 6(b). Low pass filter –the transfer S21 and reflection S11 functions.

4. CONCLUSION.

The described design allows the producing of a universal test generator for an application in many different television fields. By utilization of up- to- date integrated circuits, appropriate schematic resolutions and the software design, are reached very good technical performances at acceptable prices.

5. ACKNOWLEDGMENT

The authors wish to thank H.Hristov and Z.Nentchev, design engineers from "TECOM-3" –Botevgrad, for their thoughtful suggestions, critiques, assistance and cooperation extended during the design and development of the described generator.

6. REFERENCES

1.Georgiev J.K., S.N.Hristov and P.S. Stoinova, "*TV modulator for cable stations"*, Electronics 2002,Sozopol

2.Georgiev J.K., S.N.Hristov and P.S. Stoinova, *"Programmable TV modulator for cable stations",* Electronics 2003,Sozopol

3.Georgiev J.K., S.N.Hristov and P.S. Stoinova, **"***Generator for TV test signal*", Smolian, 2004

4.Dobrev M.D. and L.T. Jordanova, *"Receiving of a radio and TV programs by stations and a cable",* Electroninvest, S.,1996

5.Konov K. and D.Makedonski, *"Up – to date TV receivers",* Dios, S.1999

6.Mishev D., D.Makedonski and J.Jordanova, "*Satellite and Cable television",* Color,Varna,1997

7.William O.Grant,*"Cable television",*Exton, PA,1994

8.Marcelo F. Maggi *"Video pattern generator",* mmaggi@hotmail.com, April, 1998

9.Saal Rudolf, *"Handbuch zum filterenwurf",* AEG-Telefunken, 1979

10.GV-698, Instruction manual, "TV generator PROMAX", Barcelona, 1993